The Majorana Collaboration

Brown University, Providence, RI
Rick Gaitskell

Duke University, Durham, NC
Werner Tornow

Institute for Theoretical and Experimental Physics, Moscow, Russia
A. Barabash, S. Konovalov, V. Stekhanov, V. Umatov

Joint Institute for Nuclear Research, Dubna, Russia
V. Brudanin, S. Egorov, O. Kochetov, V. Sandukovsky

Lawrence Berkley National Laboratory, Berkley, CA
Paul Fallon, I. Y. Lee

Lawrence Livermore National Laboratory, Livermore, CA
Kai Vetter

Los Alamos National Laboratory, Los Alamos, NM
Steve Elliott, Andrew Hime

New Mexico State University, Carlsbad, NM
Joel Webb

North Carolina State University, Raleigh, NC
Eric Adles, Rakesh Kumar Jain, Jeremy Kephart, Ryan Rohm, Albert Young

Osaka University, Osaka, Japan
Hiro Ejiri, Ryuta Hazama, Masaharu Nomachi

Pacific Northwest National Laboratory, Richland, WA
Harry Miley, *Co-spokesperson*
Craig Aalseth, Dale Anderson, Ronald Brodzinski, Shelece Easterday, David Jordan, Richard Kouzes, William Pitts, Robert Thompson, Ray Warner

University of Chicago, Chicago, IL
Juan Collar

University of South Carolina, Columbia, SC
Frank Avignone, *Co-spokesperson*
Horacio Farach, John M. Palms, George King

University of Washington, Seattle, WA
Peter Doe, Kareem Kazkaz, Hamish Robertson, John Wilkerson

http://majorana.pnl.gov

Germanium Basics

- "Internal Source Method" from Fiorini
- ^{76}Ge: Endpoint = 2039 keV
  - Energy above many contaminants
  - Except: ^{208}Tl, ^{60}Co, ^{68}Ge…
- FWHM = 3-4 keV around 2 MeV (~0.2%)
- Long experience with Ge $\beta\beta$ decay
  - Previous efforts found 2ν at $T_{1/2}$ ~10^{21} y
  - Expect 0ν at $T_{1/2}$ ~ 4 x 10^{27} y
- Ready to go!
  - Essentially no R&D needed

Majorana Overview

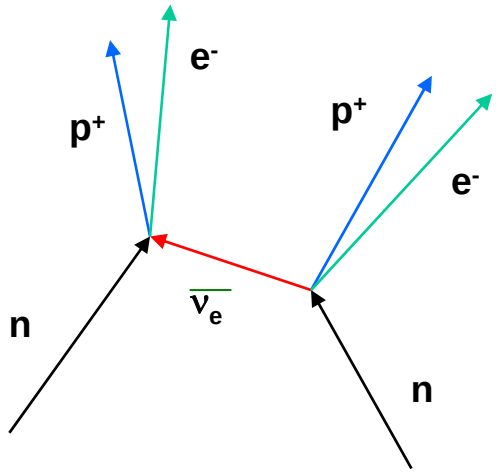

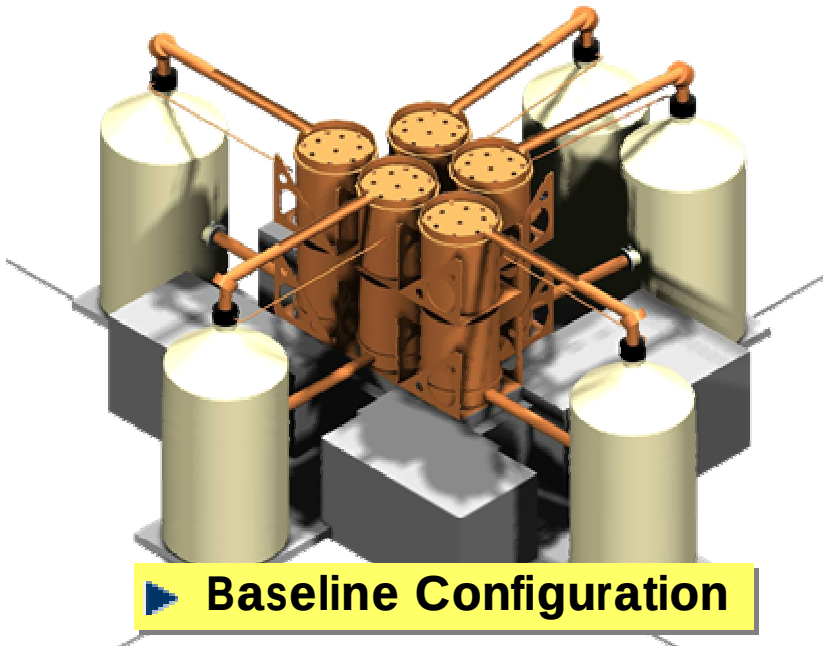

Baseline Configuration

- $0\nu\beta\beta$ decay of ^{76}Ge potentially measured at 2039 keV
- Sensitive to effective Majorana ν mass as low as 0.02-0.07 eV
- Based on well known ^{76}Ge detector technology plus:
  - Pulse-shape analysis
  - Detector segmentation
  - *Ready to begin now*
- Requires:
  - Deep underground location
  - 500 kg enriched 85% ^{76}Ge
  - many crystals, each segmented
  - Advanced signal processing
    - Pulse shape discrimination
  - Special low bkg materials

Majorana Baseline Concept

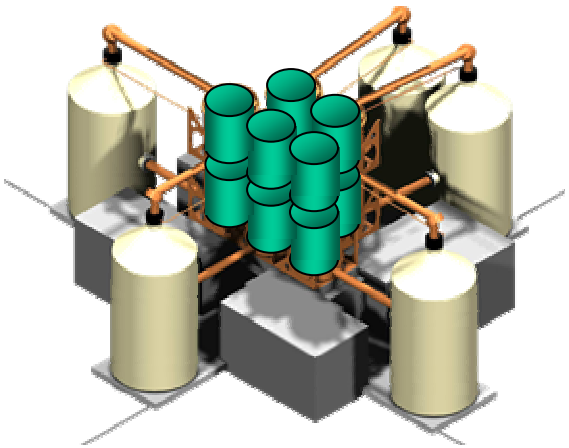

3-D model of baseline configuration

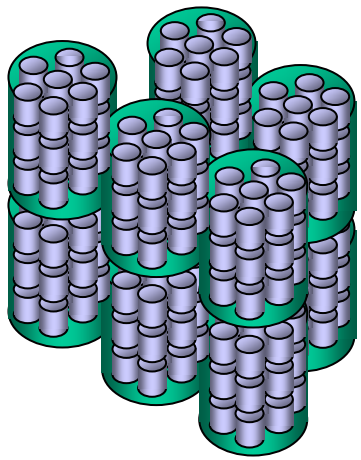

210 2.35 kg crystals

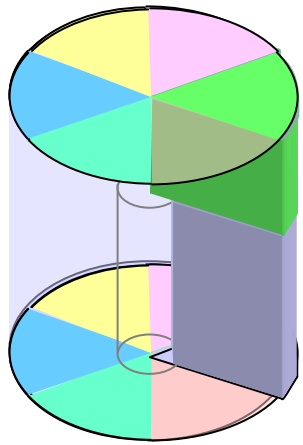

Segmentation (6x2) results in 2500 individual 200g segments

- **Optimization underway of performance and risk**
  - **Several low risk baseline designs possible**
  - **Many segmentation schemes possible**
- **Alternative packaging, cooling, shielding under consideration**
  - **Nature of Ge crystals allows repackaging**

Starting Background Estimate

- **International Germanium Experiment (IGEX) achieved between 0.1-0.3 cts/keV/kg/y**
- **Documented experiences with cosmic secondary neutron production of isotopes**

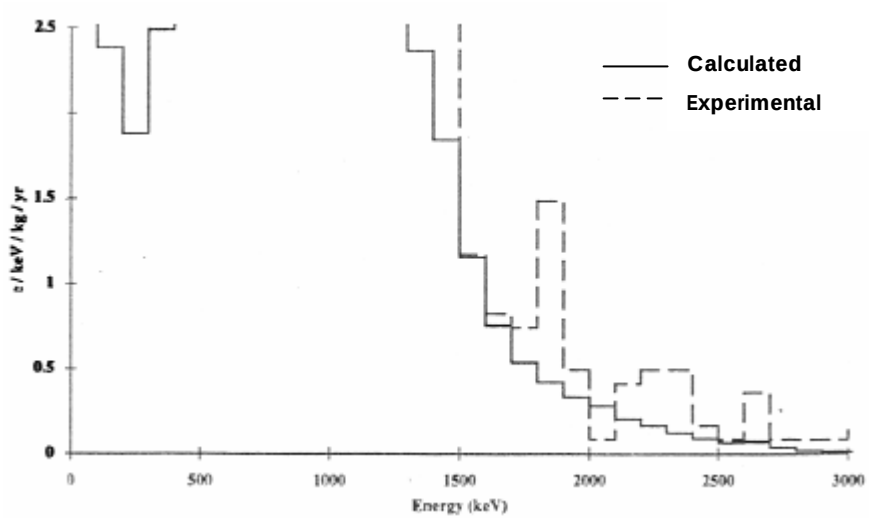

Spallation Isotope	$T_{1/2}$ (d)	Rate from [Bro95]	After Construction	Rate During Experiment	Total in ROI	After PSD Rejection	After Seg Rejection
^{68}Ge	270.82	0.1562	0.03702	3.93E-03	70.15	18.59	2.57
^{56}Co	77.27	0.0238	0.00212	6.43E-05	1.15	0.30	0.04
^{60}Co	1925.2	0.0177	0.01294	7.15E-03	127.55	33.80	4.66
^{58}Co	70.82	0.0024	0.000202	5.60E-06	0.10	0.03	0.00
		cts/keV/kg/y	cts/keV/kg/y	cts/keV/kg/y	Counts	Counts	Counts
Total		0.2	0.0523	0.0112	198.95	52.72	7.28

Sensitivity vs. Time

- **Slow Baseline:** Gradual ramp to 100 kg/y - total 500 kg 85% ^{76}Ge
- **Fast Baseline:** 200 kg/y (No ramp)
- Present $0\nu\beta\beta$ ^{76}Ge $T_{1/2}$ limit rapidly surpassed ($T_{1/2} > 1.9\ 10^{25}$ y)

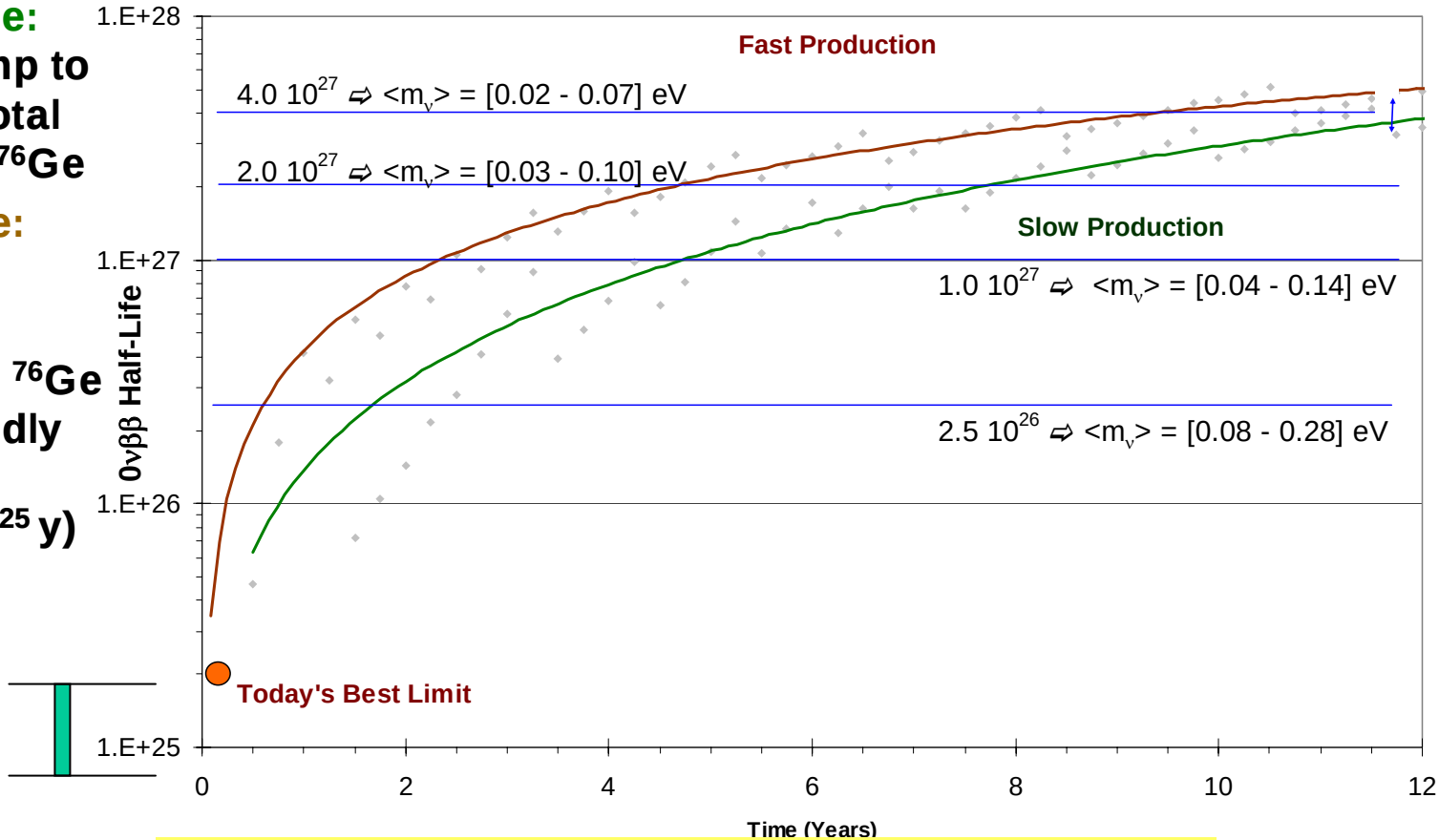

- **Based on early IGEX background levels with reasonable background reduction and cutting methods applied**

Collaboration Progress:
Optimization and Prep for Full Experiment

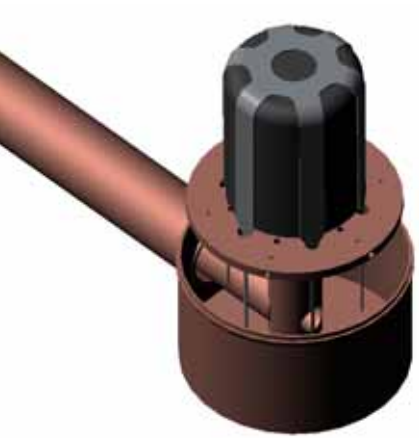

Segmented Enriched Germanium Array (SEGA):

Segmented Ge

1 to 5 Crystals

High energy n bkg

Pulse analysis test

Materials screening

Multi Element Germanium Assay (MEGA):

16+2 natural Ge

High density

Materials qualification

Cryo design test

Geometry test

Powerful screening tool

MAJORANA:

210 Ge detectors

All enriched/segmented

Ten 21-crystal modules

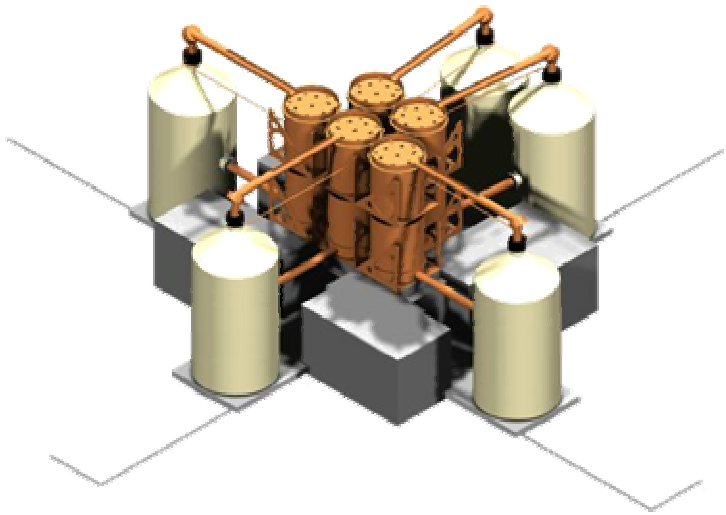

Full Experiment

Progress and Status
SEGA: Segmentation Optimization

- **First (enriched) 6x2 SEGA operating**
  - **Current: Testing (TUNL)**
  - **Shallow UG testing at U Chicago LASR facility**
  - **Operation in WIPP**
- **Second and third SEGA planning**
  - **Funds in hand (LANL, USC)**
  - **Alternate segmentation testing in planning (USC/PNNL)**

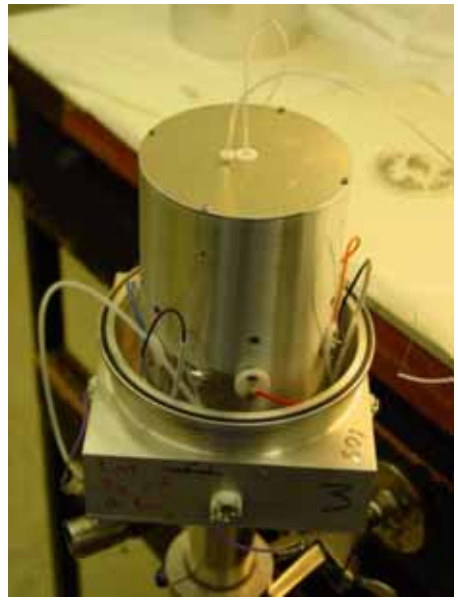

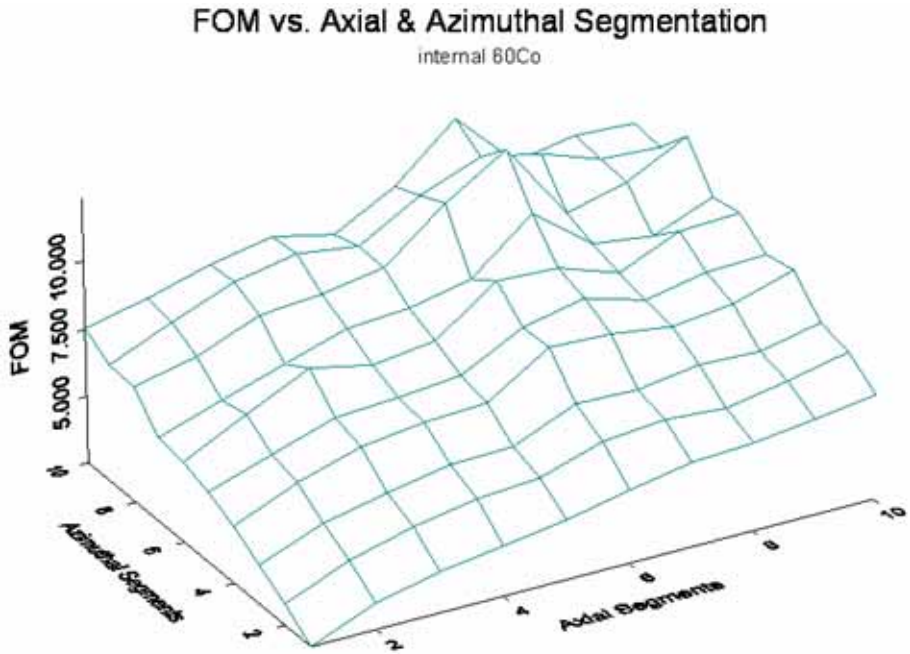

Progress and Status
MEGA: Cryogenic testing

- **Materials in hand**
  - **Detectors (20 70%), pulse electronics**
- **Assembly and cryogenic testing of two-packs underway (PNNL, UW)**
- **UG facility (WIPP) in prep (LANL, NMSU)**
- **Summer installation anticipated**
- **Sensitive to ~1e4 short-lived atoms**

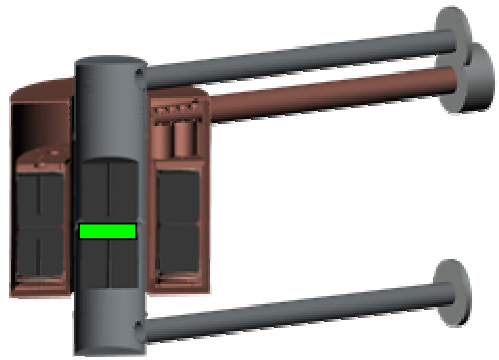

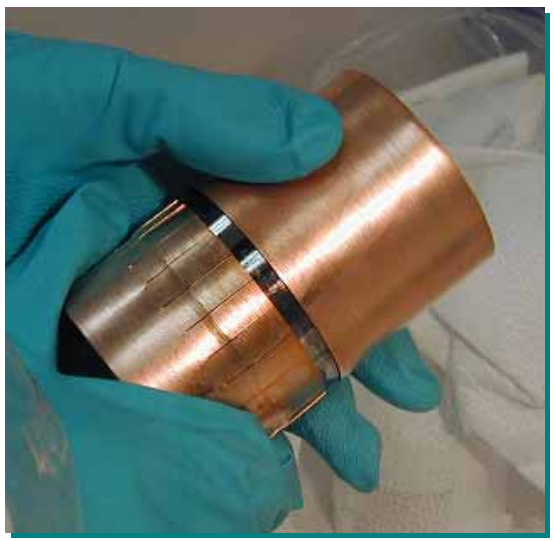

Progress and Status

Ultra-Low Level Screening

- **Screening facility**
  - **Under construction in Soudan (Brown)**
  - **Two HPGE detectors (1.05 kg, 0.7 kg)**
- **Planned testing**
  - **Minor materials used in manufacturing**
  - **Improved Cu testing**

Low-Background Electroformed Copper

Electroformed cups shown have wall thickness of only 250 μm!

- Can be easily formed into thin, low-mass parts
- Recent designs reduce M_{Cu}/M_{Ge} x5
- UG Electroforming can reduce cosmogenics
- Pre-processing can reduce U-Th
- Recent results suggest cleaner than thought

Conclusions

- **Unprecedented confluence:**
  - ***Enrichment availability/Neutrino mass interest/ Underground facility development***
- **High Density:**
  - ***Modest apparatus footprint, no special lab required***
- **Low Risk:**
  - ***Proven technology/ Modular instrument / Relocatable***
- **Experienced and Growing Collaboration**
  - ***long $\beta\beta$ track record, many technical resources***
- **Neutrino mass sensitivity:**
  - ***potential for discovery***